Wheatstone

Wheatstone Explosion-Proof Direct-Drive Integrated Servo Motor



Motors can be customized to meet customer requirements

Wheatstone

Integrated Direct-Drive Servo Motor Products

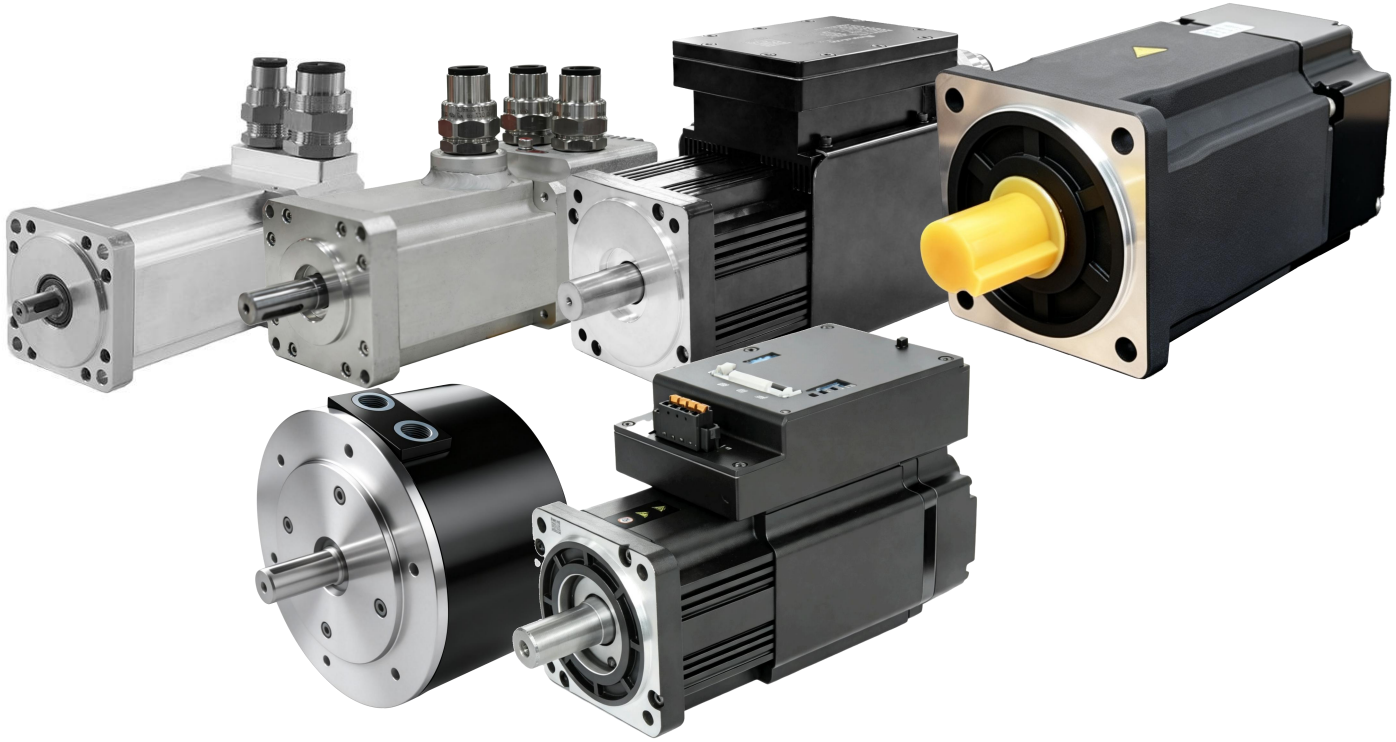

Wheatstone Explosion-Proof Integrated Servo Motor

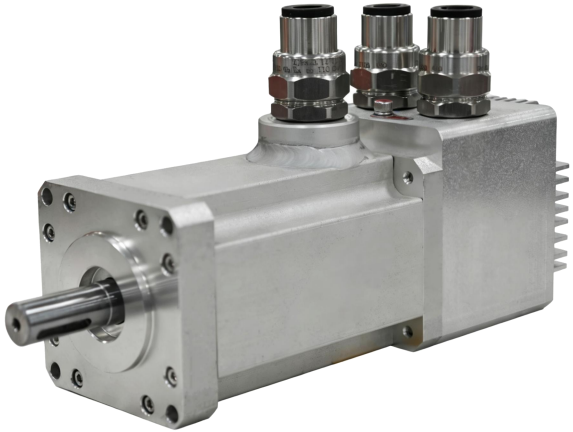

Item	Motor Parameters
Motor Frame Size	70
Rated Torque	0.6N.m
Rated Current	5A
Rated Voltage	48VDC
Rated Speed	3000RPM
Rated Power	200W
Protection Rating	IP65
Explosion-Proof Rating	Ⅱ CT6

Wheatstone Explosion-Proof Integrated Servo Motor

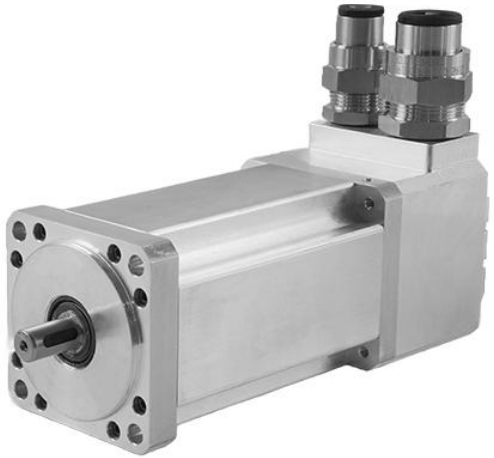

Item	Motor Parameters
Motor Frame Size	70
Rated Torque	0.6~2N.m
Rated Current	5~10A
Rated Voltage	48~72VDC
Rated Speed	3000RPM
Rated Power	200~600W
Protection Rating	IP66
Explosion-Proof Rating	ⅡCT6

Wheatstone Explosion-Proof Integrated Servo Motor

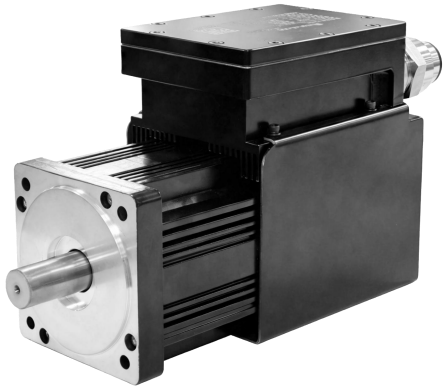

Item	Motor Parameters
Motor Frame Size	90
Rated Torque	2.4~3.3N.m
Rated Current	20~30A
Rated Voltage	48~72VDC
Rated Speed	3000RPM
Rated Power	0.75~1KW
Protection Rating	IP66
Explosion-Proof Rating	ⅡCT6

Wheatstone Air-Cooled Integrated Servo Motor

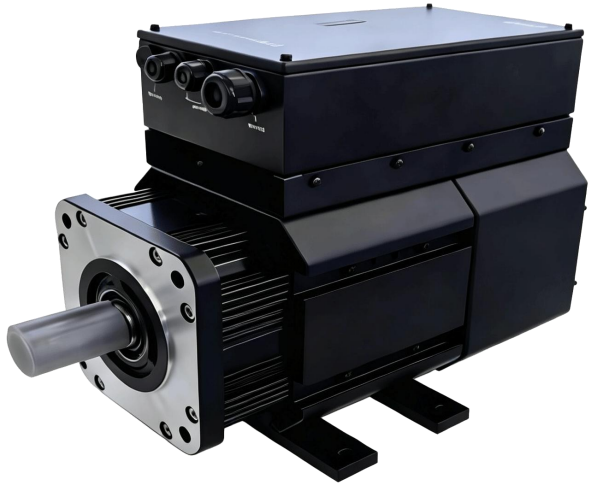

Item	Motor Parameters
Motor Frame Size	110/130/180
Rated Torque	31~62N.m
Rated Current	10.7~21.6A
Rated Voltage	AC380V
Rated Speed	1700RPM
Rated Power	5.5~11KW
Protection Rating	IP65
Cooling Method	Air Cooling
Explosion-Proof Rating	ⅡCT6

Wheatstone Integrated Servo Drive Motor



Item	Motor Parameters
Motor Frame Size	60/80
Rated Torque	0.64~3.2N.m
Rated Current	11~26.7A
Rated Voltage	24~72V
Rated Speed	3000RPM
Rated Power	0.2~1KW
Protection Rating	IP54 (IP65 optional)
Cooling Method	Natural Cooling
Explosion-Proof Rating	ⅡCT6

Wheatstone Integrated Servo Drive Motor



Applications:

Medical equipment, logistics conveyors, industrial robots, automated assembly, automated production lines, new-energy forklifts, crawler robots, AGV transport vehicles

Key Features:

Control modes: position, velocity, torque;

Programmable protection:

Position error, overcurrent, overvoltage or undervoltage, I^2t, output short circuit, overload and other comprehensive protection functions. Flexible communication:

Position feedback: incremental encoder

Communication:

1. RS232 serial interface, baud rate up to 115 kb
2. RS485 MODBUS RTU serial interface, baud rate up to 115 kb
3. CAN communication, compatible with CANopen DS-402, baud rate up to 1 MHz (choose either RS485 or CAN)
4. Power supply voltage: 18-70 VDC (18-32 VDC and 18-90 VDC available on request)

Wheatstone Integrated Servo Drive Motor



Item	Motor Parameters
Motor Frame Size	60/80
Rated Torque	0.64~2.39N.m
Rated Current	5~20A
Rated Voltage	24~60V
Rated Speed	3000RPM
Rated Power	0.2~0.75KW
Protection Rating	IP54
Cooling Method	Natural Cooling
Explosion-Proof Rating	ⅡCT6

Wheatstone Integrated Servo Drive Motor



Highly Integrated:

Integrated design of drive, encoder and brake. The compact size saves installation space, completely eliminates the cables between motor and drive, prevents connection failures and significantly reduces the equipment failure rate.

Powerful Performance:

3x overload capability, supports 24 VDC-60 VDC wide-voltage power supply, 200 W-750 W multiple power options to suit various applications.

Flexible Communication:

Supports CANopen, Modbus RTU, EtherCAT, PROFINET and other mainstream industrial protocols for easy integration.

Safe and Reliable:

Multiple protections against overvoltage, undervoltage, short circuit, motor overheating (I^2T) and drive overheating. Integrated alarm-synchronized braking, battery backup and other logistics-specific functions ensure safe equipment operation.

Typical Applications:

Suitable for smart logistics applications such as KIVA-like AGVs, aisle shuttles, inspection robots, intelligent AGVs and parking AGVs.

Wheatstone Air-Cooled Explosion-Proof Integrated Servo Motor



Item	Motor Parameters
Motor Frame Size	270
Rated Torque	7~13N.m
Rated Current	13~32A
Rated Voltage	220VAC
Rated Speed	4500RPM
Rated Power	3.3~6.1W
Protection Rating	IP65
Cooling Method	Liquid Cooling
Explosion-Proof Rating	ⅡCT6